TITAN ATTACHMENTS

LSWX410

Skidsteer Log Splitter

MPN: LSWX410
SKU: 198341
UPC: 737069524931

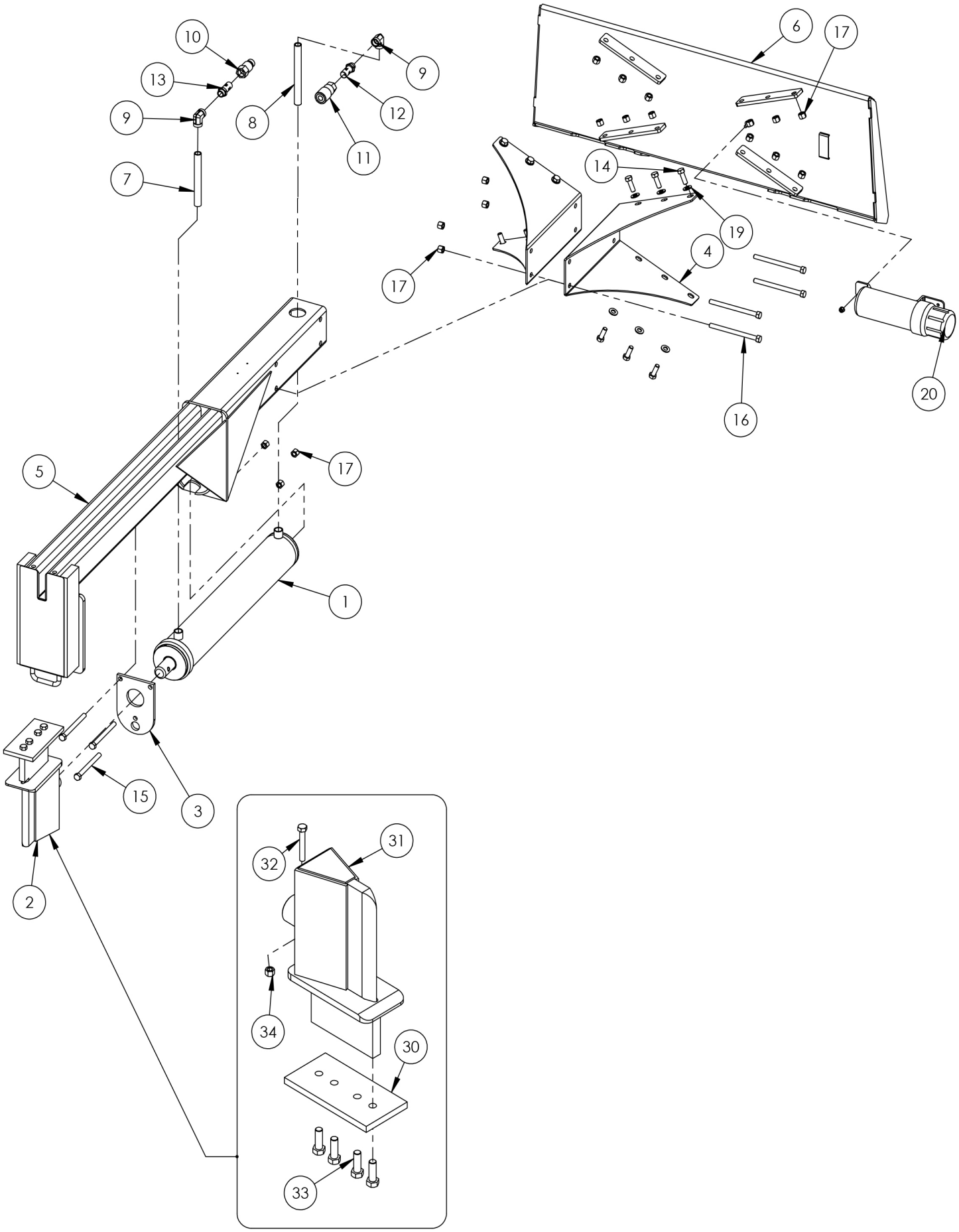
10
13
9
7
8
9
12
11
6
17
14
19
4
17
16
20
5
17
1
15
3
2
31
32
34
30
33

DIAGRAM NO.	PART NUMBER	DESCRIPTION	QTY
1	P-198341-1	Cylinder, 4 x 24 x 1-1/2	1
2	P-198341-2	Assembly, Wide Sliding Wedge	1
3	P-198341-3	Plate, Cylinder Retaining (Bolt)	1
4	P-198341-4	Gusset Frame, Skidsteer Mount	2
5	P-198341-5	Main Frame	1
6	P-198341-6	Weldment, Skidsteer Mount	1
7	P-198341-7	Pipe Nipple, MP08 x 7”	1
8	P-198341-8	Pipe Nipple, MP08 x 8”	1
9	P-198341-9	Elbow 90 FP x FP 0808	2
10	P-198341-10	Flat Face, FP08 x MISO 16028	1
11	P-198341-11	Flat Face, FP08 x FISO 16028	1
12	P-198341-12	1/2 Hose, 1/2MPx1/2MPX 75”	1
13	P-198341-13	1/2 Hose, 1/2MPx1/2MPX 96”	1
14	P-198341-14	Hex Bolt 1/2NC x 1-1/2	12
15	P-198341-15	Hex Bolt 1/2NC x 5-1/2	3
16	P-198341-16	Hex Bolt 1/2NC x 6-1/2	4
17	P-198341-17	Hex Lock Nut 1/2NC	19
18	P-198341-18	Flange Nut 5/16NC	1
19	P-198341-19	Flat Washer 1/2	12
20	P-198341-20	Manual Tube 3-1/2 Short	1
30	P-198341-21	Plate, Sliding Wedge Capture	1
31	P-198341-22	Weldment, Sliding Wedge	1
32	P-198341-23	Hex Bolt 3/8NC x 2-1/2	1
33	P-198341-24	Hex Bolt 1/2NF x 1-1/2	4
34	P-198341-25	Hex Lock Nut 3/8NC	1