OWNER'S MANUAL

MPN(s): GHR

SKU(s): 400325

UPC(s): 719318384664

PARTS DIAGRAM / EXPLODED VIEW

PARTS LIST

A MAIN FRAME 1 PC	B WHEEL 4PCS

HARDWARE LIST

1	2	3
BOLT(M10*50) 4PCS	WASHER(M10) 12PCS	4PCS

ASSEMBLY INSTRUCTIONS

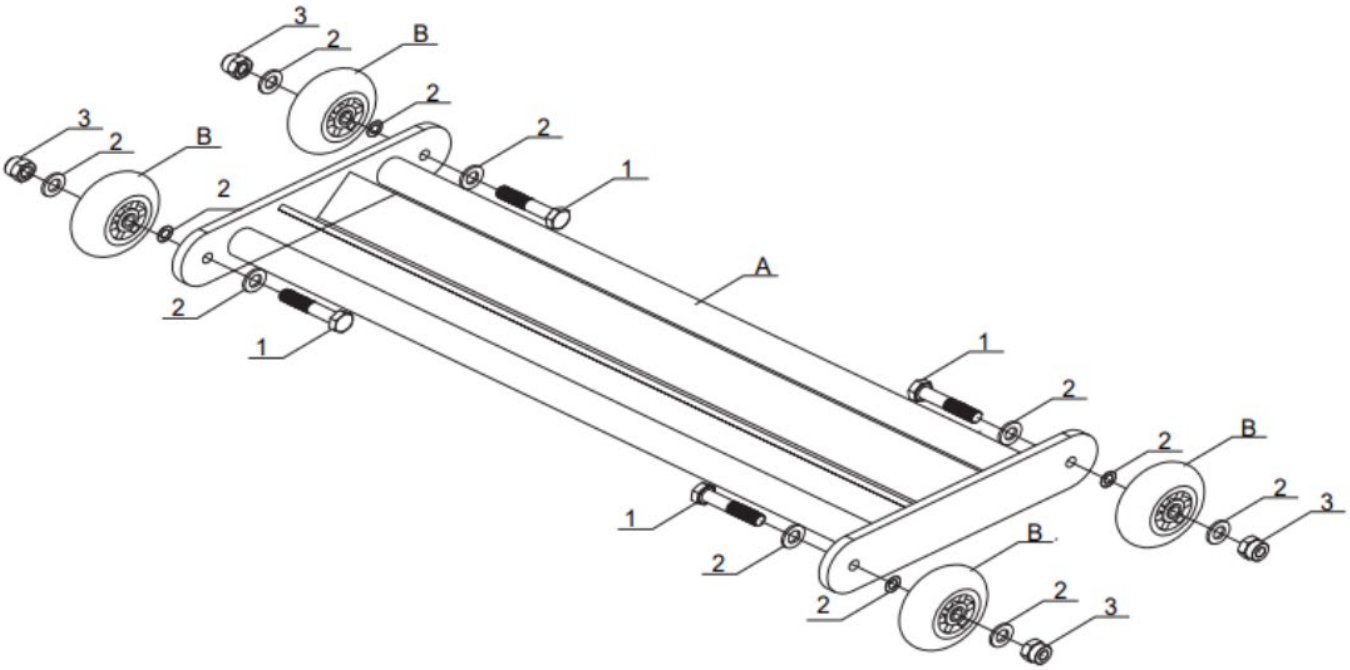

This concludes the GHR Owner's Manual.

If applicable to your product, make sure to tighten all nut-and-bolt combinations before use.

Enjoy!

DISCLAIMER

This equipment must be used with care by capable and competent individuals under supervision, if necessary.

The use of any fitness equipment, including this one, involves the potential risk of injury. You accept and assume full responsibility for any and all injuries, damages (both economic and non-economic), and losses of any type, which may occur, and you fully and forever release and discharge Titan, its insurers, employees, officers, directors, associates, and agents from any and all claims, demands, damages, rights of action, or causes of action, present or future, whether the same be known or unknown, anticipated, or unanticipated, resulting from or arising out of the use of said equipment.

TITAN MAKES NO WARRANTY WHATSOEVER WITH RESPECT TO THE EQUIPMENT, INCLUDING ANY WARRANTY OF MERCHANTABILITY OR WARRANTY OF FITNESS FOR A PARTICULAR PURPOSE, WHETHER EXPRESS OR IMPLIED BY LAW, COURSE OF DEALING, COURSE OF PERFORMANCE, USAGE OF TRADE OR OTHERWISE. BUYER ASSUMES ALL LIABILITY IN USE OF THE EQUIPMENT.

NEED HELP?

CONTACT US FIRST.

1 (800) 605-8241

info@titandistributorsinc.com / www.titan.fitness

Business Hours: Monday–Friday • 8:00 a.m.–5:00 p.m. (CT)