FY-903 pasts list

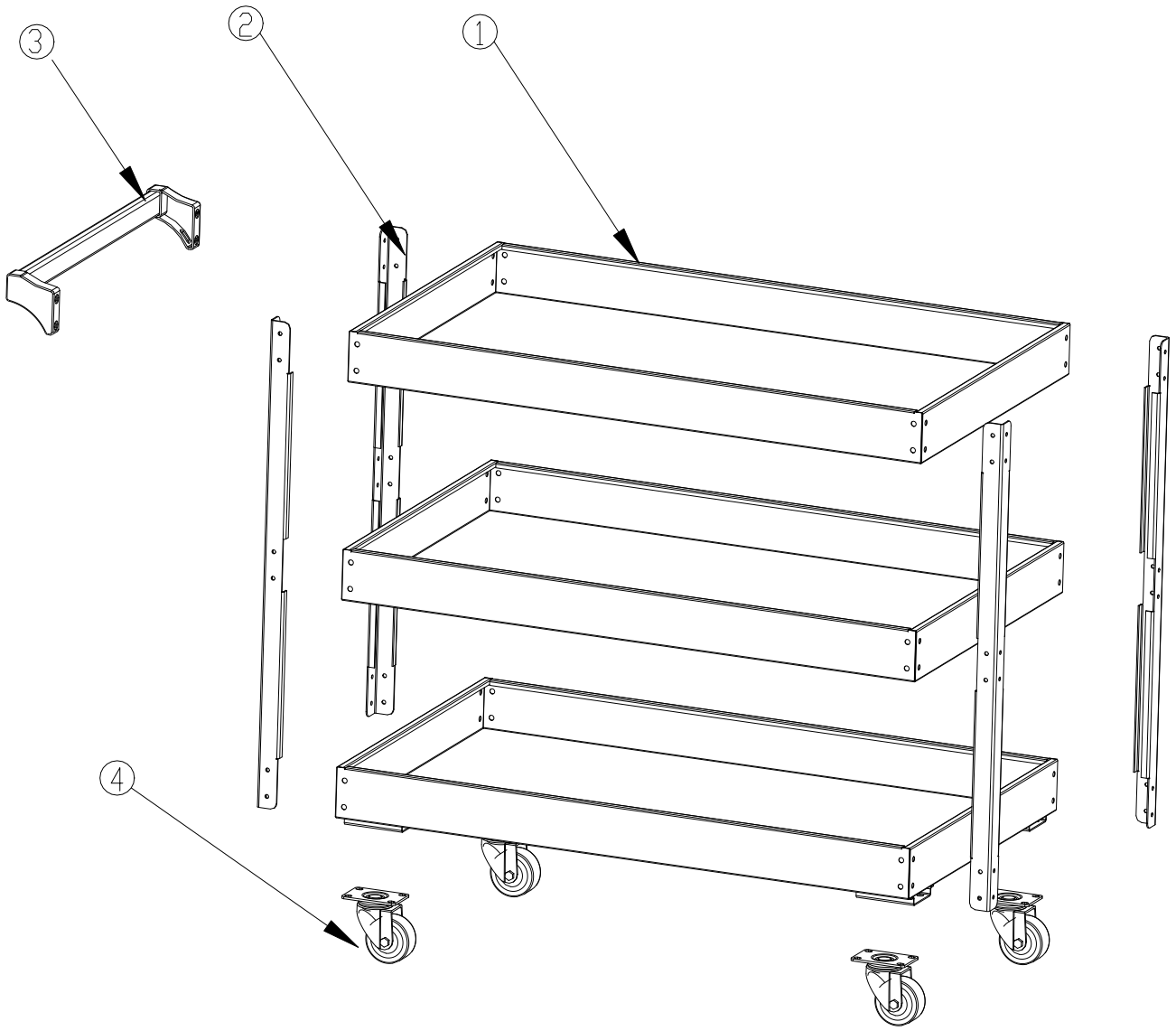

DIAGRAM No.	DESCRIPTION	PART NUMBER	QTY	DIAGRAM No.	DESCRIPTION	PART NUMBER	QTY	DIAGRAM No.	DESCRIPTION	PART NUMBER	QTY
①	Steel Tray	T-9031	four	②	Support	T-9032	four	③	Handle	T-9033	one
④	Caster	T-9034	four								