ASSEMBLY INSTRUCTION

A	B	C
	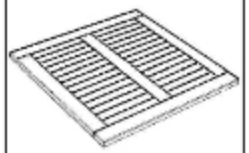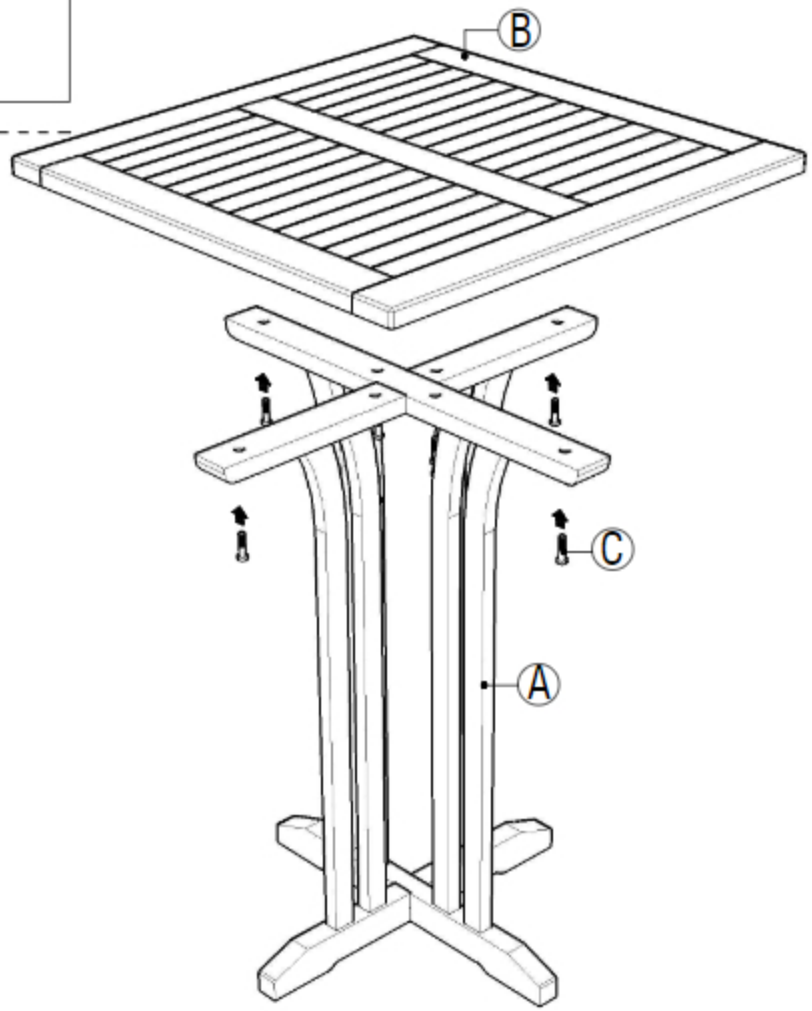	M8 x 4.5 cm braaa
1 PC	1 PC	8 PCS